MONUMENT WELL & COVER
(OLYMPIC FOUNDRY PART NO. M1010)

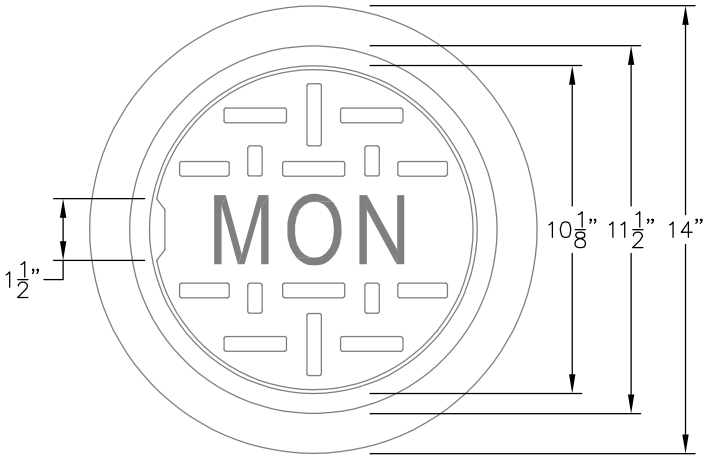

RISER RING
(OLYMPIC FOUNDRY PART NO. M1015R)

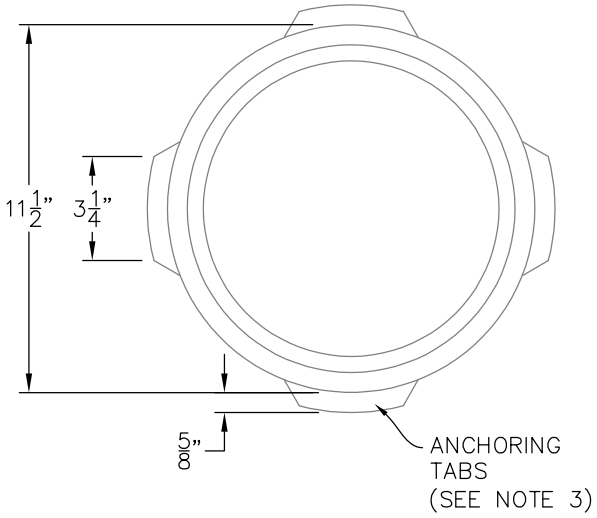

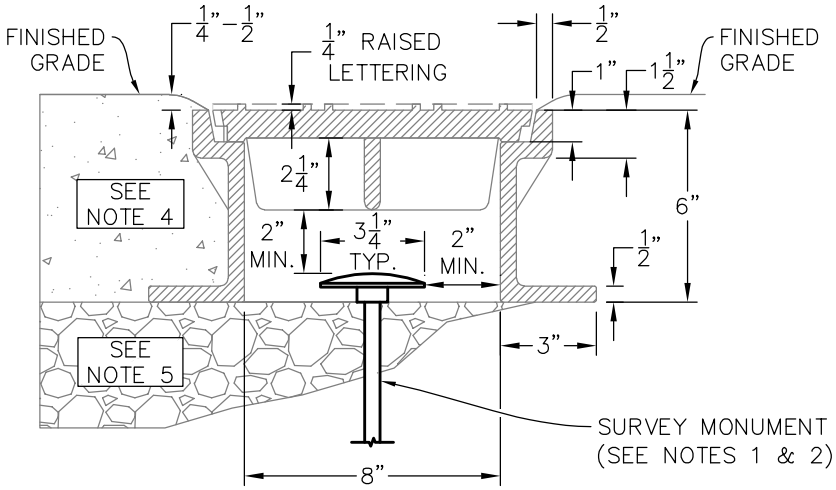

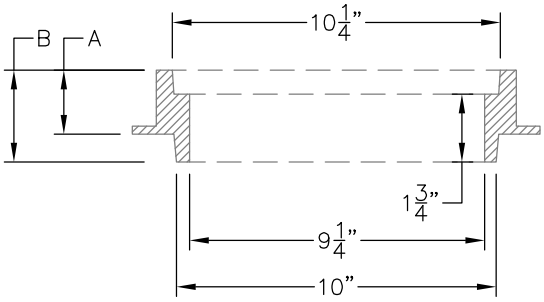

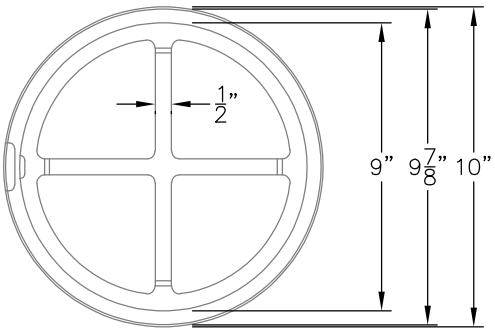

RISER RING TABLE

RISER HEIGHT (DIM. A)	DIM. B
1 1/2"	2 1/2"
2"	3"
3"	4"

CONSTRUCTION NOTES:

1. CENTER OF MONUMENT WELL TO BE STAKED BY SURVEYOR.
2. SURVEY MONUMENT TO BE INSTALLED BY COUNTY SURVEYOR, OR APPROVED CONSULTING SURVEYOR.
3. RISER RINGS MAY HAVE OPTIONAL ANCHORING TABS. SEE PLAN FOR SPECIFICATIONS.
4. HMAC OR PCC PAVEMENT PER PLAN.
5. BASE ROCK SHALL BE COMPACTED TO 95% OF STANDARD PROCTOR PRIOR TO MONUMENT WELL INSTALLATION. BASE ROCK THICKNESS PER PLAN.

DESCHUTES COUNTY ROAD DEPARTMENT

TITLE: STANDARD MONUMENT WELL & RISER RINGS		DWG NO: 3-1
DATE: 1/18/2024	SCALE: NTS	APPROVED BY: C. SMITH