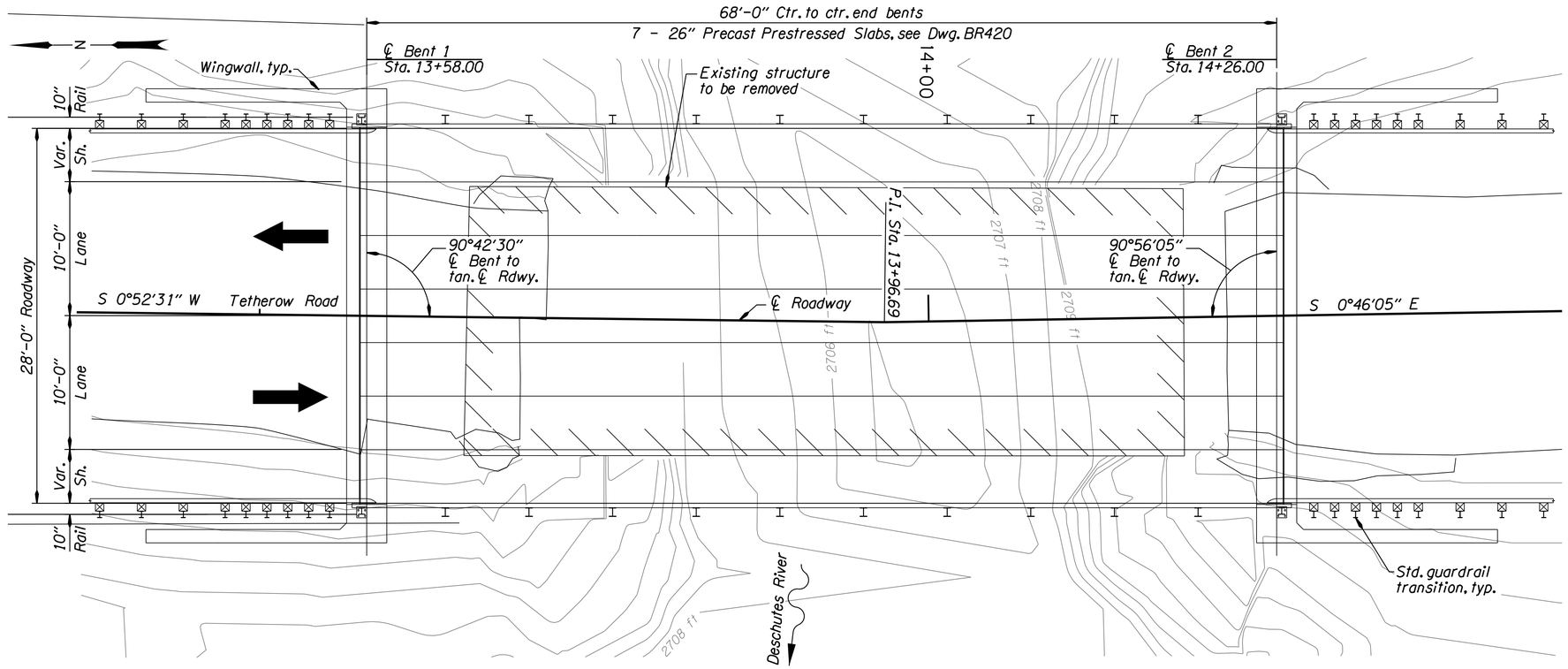

PLAN

Scale: 1" = 5'-0"

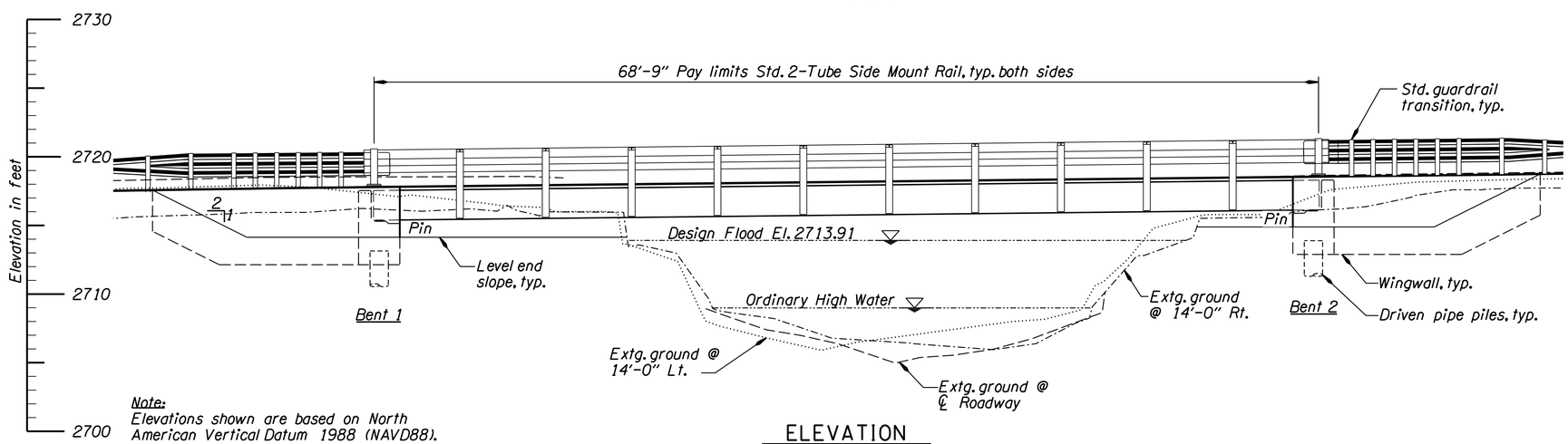

Note:
Elevations shown are based on North American Vertical Datum 1988 (NAVD88).

ELEVATION

Scale: 1" = 5'-0"

OREGON DEPARTMENT OF TRANSPORTATION

DESCHUTES COUNTY

DAVID EVANS AND ASSOCIATES INC.
530 Center Street N.E., Suite 605
Salem Oregon 97301
Phone: 503.361.8635

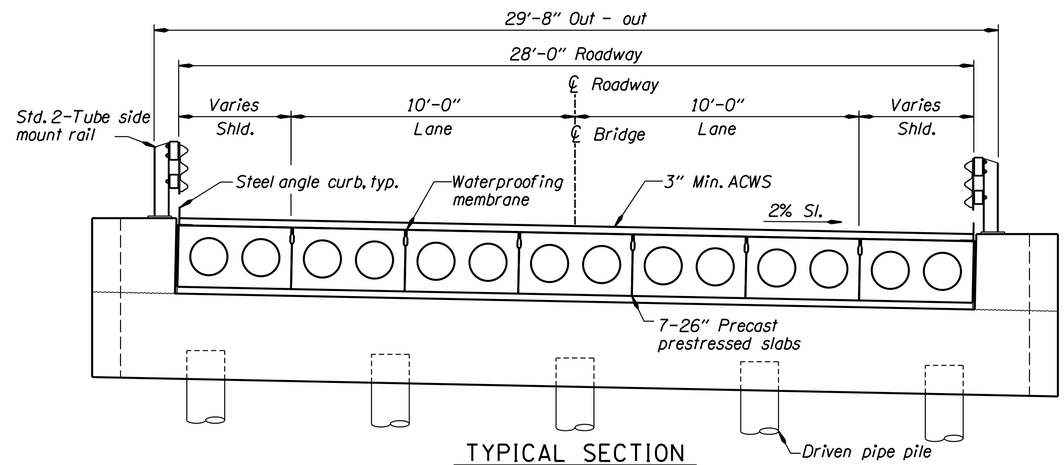

TYPICAL SECTION

Scale: 3/8" = 1'-0"

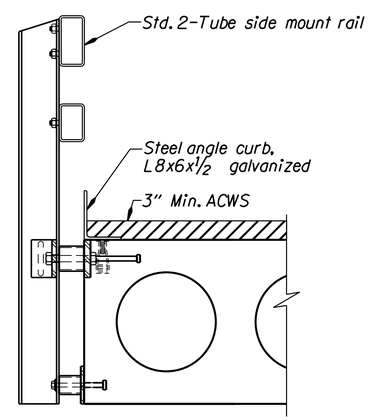

BRIDGE RAIL DETAIL

No Scale

OREGON DEPARTMENT OF TRANSPORTATION

DESCHUTES COUNTY

DAVID EVANS AND ASSOCIATES INC.
530 Center Street N.E., Suite 605
Salem Oregon 97301
Phone: 503.361.8635

Sec. 36, T. 14 S, R. 12 E., W.M.

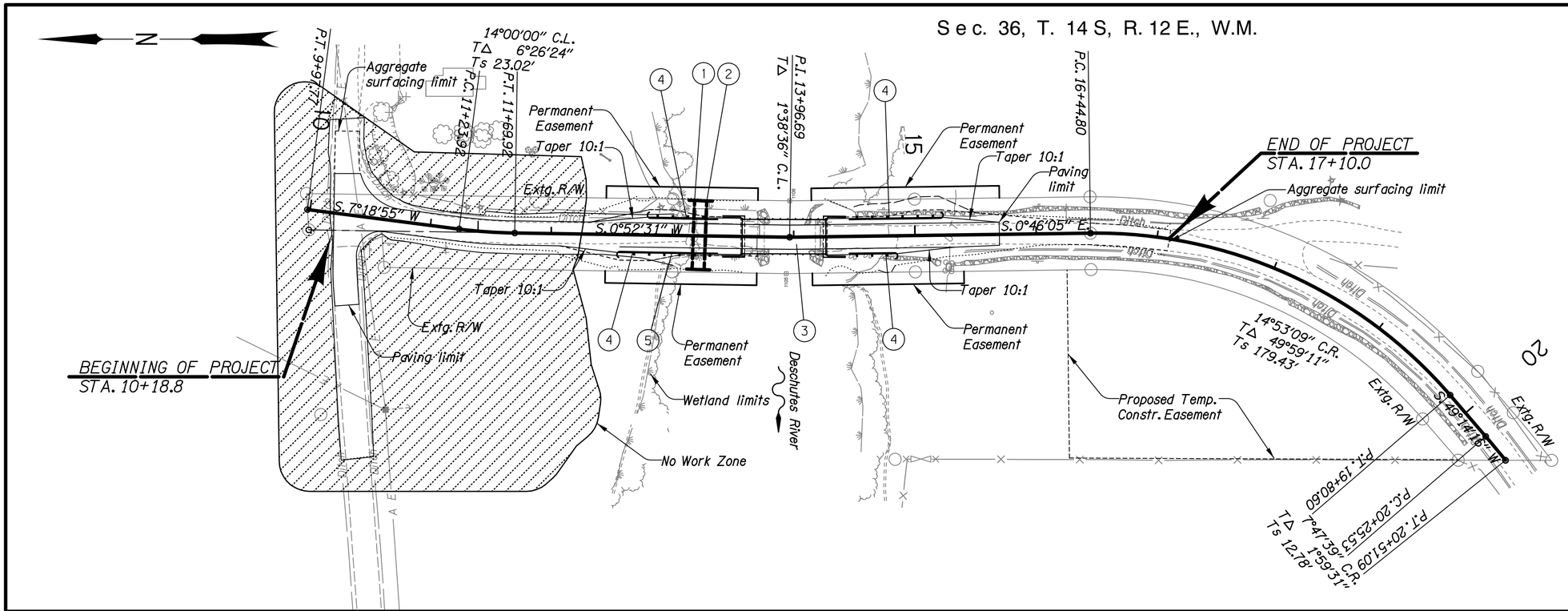

1. Sta. 13+17
   Inst. 36" culv. pipe - 57'
   Remove pipe - (36"-CMP)
2. Sta. 13+27
   Inst. 36" culv. pipe - 57'
   Remove pipe - (36" CMP)
3. Stucture No. 22384
   Remove structure
   Const. structure
4. Const. guardrail
   Const. guardrail terminal, non-flared
   Test level 2
   Const. guardrail to bridge transition
5. Const. drainage curb

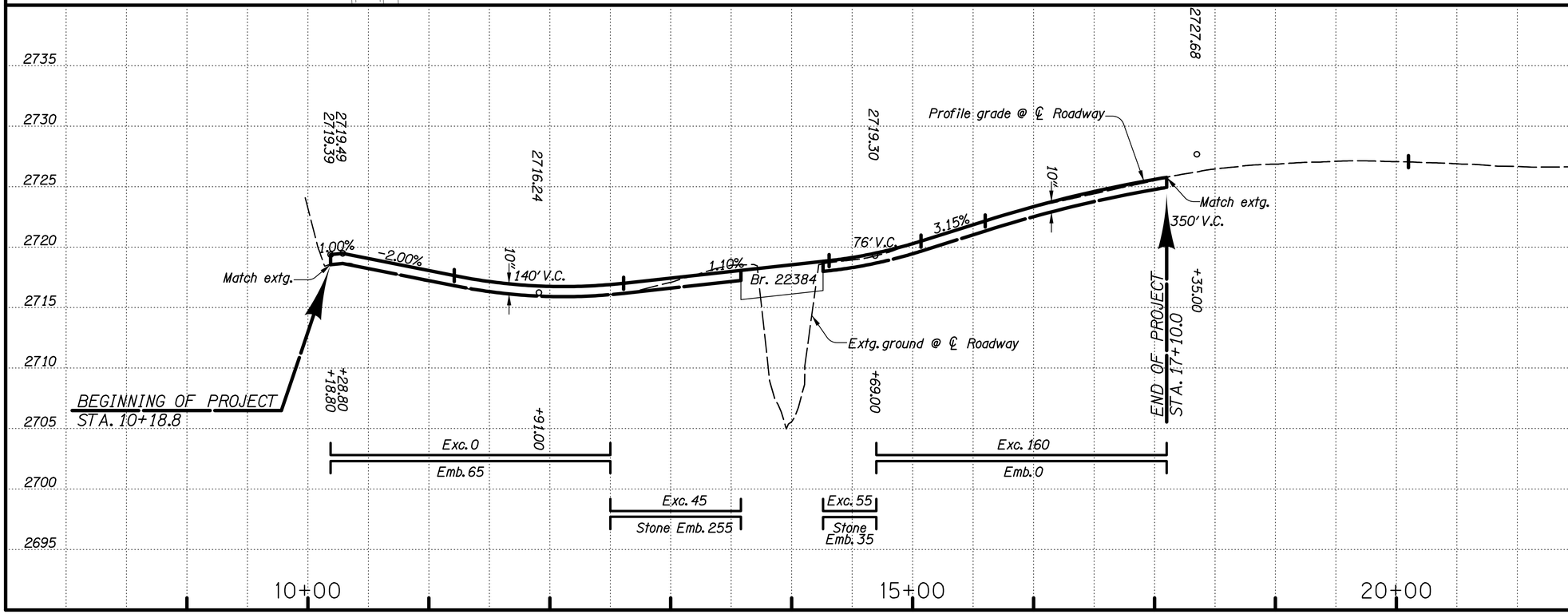

DESCHUTES COUNTY

DAVID EVANS AND ASSOCIATES INC.
530 Center Street N.E., Suite 605
Salem Oregon 97301
Phone: 503.361.8635

OREGON DEPARTMENT OF TRANSPORTATION

OREGON DEPARTMENT OF TRANSPORTATION

DESCHUTES COUNTY

DAVID EVANS AND ASSOCIATES INC.
530 Center Street N.E., Suite 605
Salem Oregon 97301
Phone: 503.361.8635

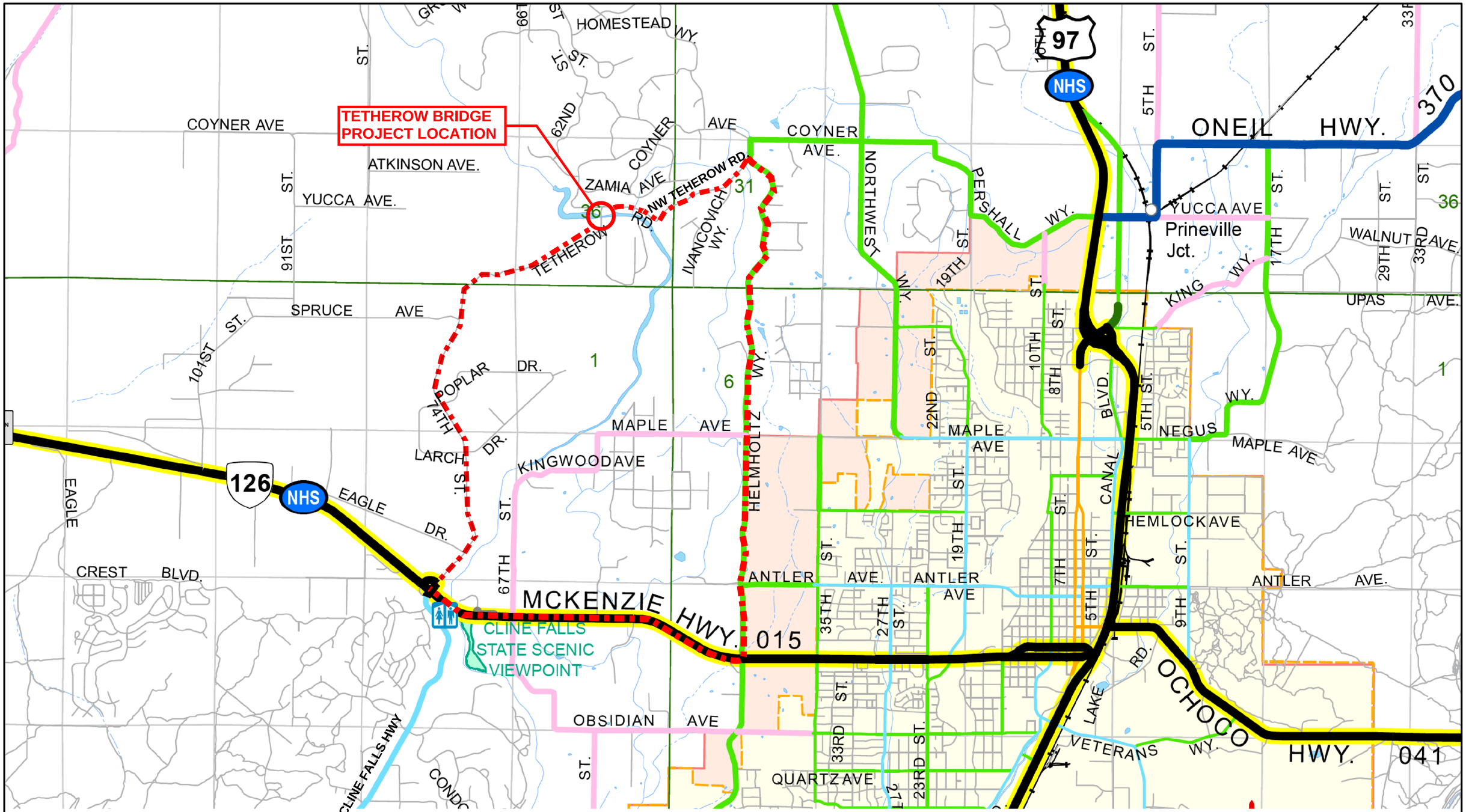

Detour Route

OREGON DEPARTMENT OF TRANSPORTATION

DESCHUTES COUNTY

DAVID EVANS AND ASSOCIATES INC.
530 Center Street N.E., Suite 605
Salem Oregon 97301
Phone: 503.361.8635